PRECISION VISES

6525-76

- Parallelism: 4μm/100mm
- Squareness: 6μm/100mm
- Made of alloy steel
- Hardness HRC56-58

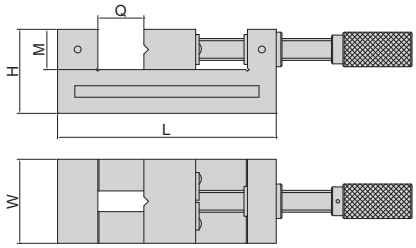

Code	Jaw opening (Q)	Jaw width (W)	L	H	M
6525-73	0-73mm	63mm	176mm	63mm	30mm
6525-76	0-76mm	73mm	190mm	73mm	35mm
6525-120	0-120mm	98mm	255mm	82mm	40mm

PRECISION VISES

6526-80

- Parallelism: 3μm/100mm
- Squareness: 5μm/100mm
- Made of alloy steel
- Hardness HRC56-58

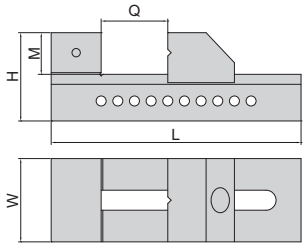

Code	Jaw opening (Q)	Jaw width (W)	Overall length (L)	H	M
6526-80	0-80mm	50mm	150mm	53mm	25mm
6526-100	0-100mm	73mm	190mm	70mm	35mm

Z-AXIS STAGE
CODE 6586-60

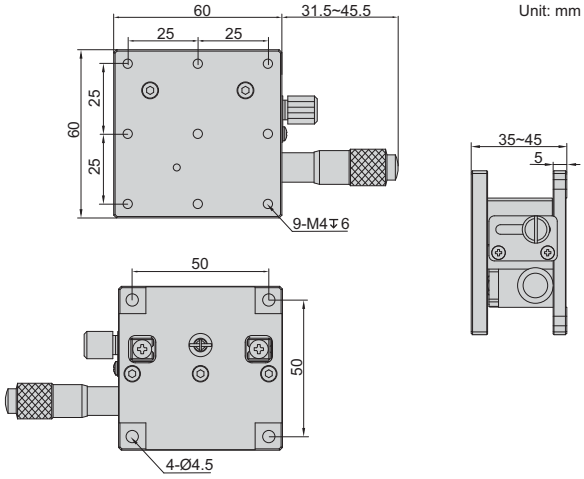

- Cross roller guides, achieve high precision and smooth movement
- Stage made of aluminum alloy

SPECIFICATION

Code	Z-axis displacement	Parallelism of top surface to bottom	Micrometer graduation	Micrometer accuracy	Maximum load	Stage size	Weight
6586-60	10mm	0.05mm	0.01mm	0.02mm	20.4N (3kgf)	60x60mm	0.27kg

X-AXIS STAGES

6582-401

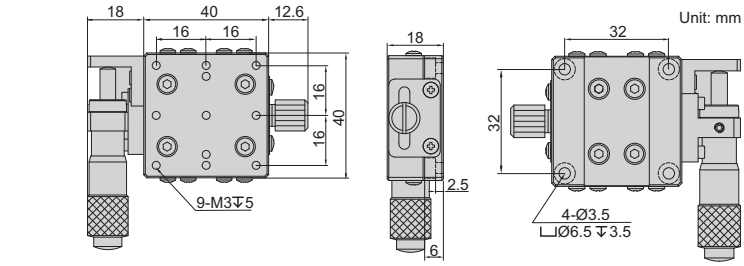

6582-602

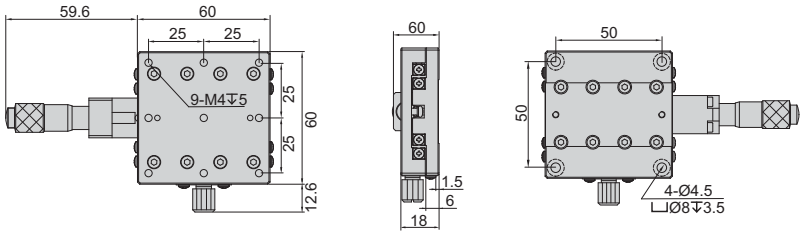

6582-903

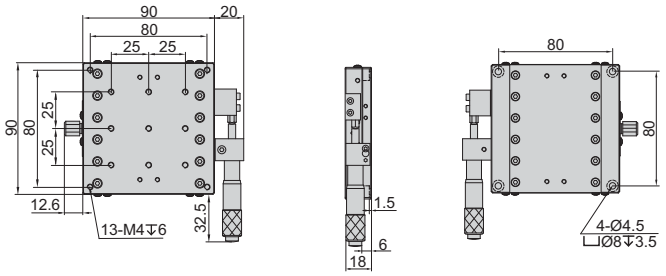

- Cross roller guides, achieve high precision and smooth movement
- Stages made of aluminum alloy

SPECIFICATION (micrometer on the left)

Code	X-axis displacement	Parallelism of top surface to bottom	Micrometer graduation	Micrometer accuracy	Maximum load	Micrometer location	Stage size	Weight
6582-401	±6.5mm	0.02mm	0.01mm	0.01mm	29.4N (3kgf)	left	40x40mm	0.14kg
6582-601	±6.5mm	0.03mm	0.01mm	0.01mm	49N (5kgf)	left	60x60mm	0.24kg
6582-901	±12.5mm	0.03mm	0.01mm	0.02mm	93.1N (9.5kgf)	left	90x90mm	0.47kg
6582-1251	±12.5mm	0.04mm	0.01mm	0.02mm	180N (18.4kgf)	left	125x125mm	1.40kg

SPECIFICATION (micrometer in the middle)

Code	X-axis displacement	Parallelism of top surface to bottom	Micrometer graduation	Micrometer accuracy	Maximum load	Micrometer location	Stage size	Weight
6582-402	±6.5mm	0.02mm	0.01mm	0.01mm	29.4N (3kgf)	middle	40x40mm	0.14kg
6582-602	±6.5mm	0.03mm	0.01mm	0.01mm	49N (5kgf)	middle	60x60mm	0.24kg
6582-902	±12.5mm	0.03mm	0.01mm	0.02mm	93.1N (9.5kgf)	middle	90x90mm	0.47kg
6582-1252	±12.5mm	0.04mm	0.01mm	0.02mm	180N (18.4kgf)	middle	125x125mm	1.40kg

SPECIFICATION (micrometer on the right)

Code	X-axis displacement	Parallelism of top surface to bottom	Micrometer graduation	Micrometer accuracy	Maximum load	Micrometer location	Stage size	Weight
6582-403	±6.5mm	0.02mm	0.01mm	0.01mm	29.4N (3kgf)	right	40x40mm	0.14kg
6582-603	±6.5mm	0.03mm	0.01mm	0.01mm	49N (5kgf)	right	60x60mm	0.24kg
6582-903	±12.5mm	0.03mm	0.01mm	0.02mm	93.1N (9.5kgf)	right	90x90mm	0.47kg
6582-1253	±12.5mm	0.04mm	0.01mm	0.02mm	180N (18.4kgf)	right	125x125mm	1.40kg

XY-AXIS STAGES

6584-401

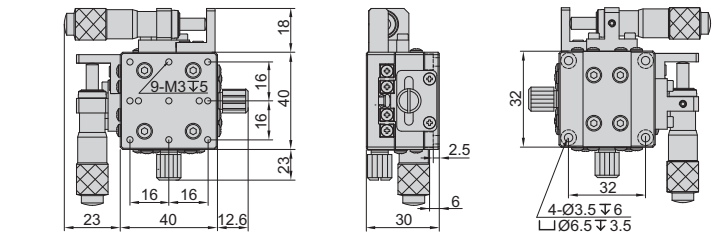

6584-602

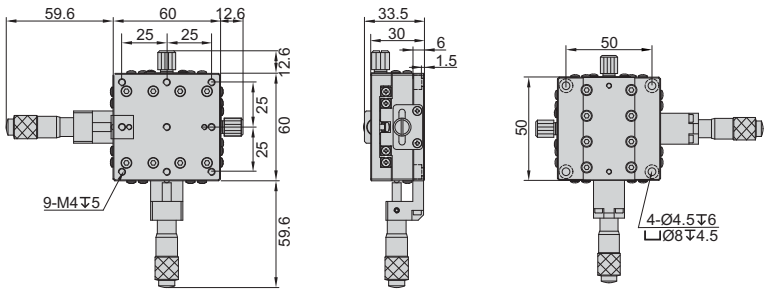

6584-903

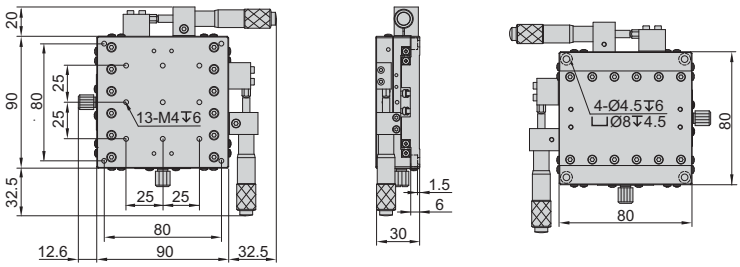

- Cross roller guides, achieve high precision and smooth movement
- Stages made of aluminum alloy

SPECIFICATION (micrometer on the left)

Code	XY-axis displacement	Parallelism of top surface to bottom	Micrometer graduation	Micrometer accuracy	Maximum load	Micrometer location	Stage size	Weight
6584-401	±6.5mm	0.04mm	0.01mm	0.01mm	29.4N (3kgf)	left	40x40mm	0.27kg
6584-601	±6.5mm	0.06mm	0.01mm	0.01mm	49N (5kgf)	left	60x60mm	0.48kg
6584-901	±12.5mm	0.06mm	0.01mm	0.02mm	93.1N (9.5kgf)	left	90x90mm	1kg
6584-1251	±12.5mm	0.08mm	0.01mm	0.02mm	180N (18.4kgf)	left	125x125mm	2.8kg

SPECIFICATION (micrometer in the middle)

Code	XY-axis displacement	Parallelism of top surface to bottom	Micrometer graduation	Micrometer accuracy	Maximum load	Micrometer location	Stage size	Weight
6584-402	±6.5mm	0.04mm	0.01mm	0.01mm	29.4N (3kgf)	middle	40x40mm	0.27kg
6584-602	±6.5mm	0.06mm	0.01mm	0.01mm	49N (5kgf)	middle	60x60mm	0.48kg
6584-902	±12.5mm	0.06mm	0.01mm	0.02mm	93.1N (9.5kgf)	middle	90x90mm	1kg
6584-1252	±12.5mm	0.08mm	0.01mm	0.02mm	180N (18.4kgf)	middle	125x125mm	2.8kg

SPECIFICATION (micrometer on the right)

Code	XY-axis displacement	Parallelism of top surface to bottom	Micrometer graduation	Micrometer accuracy	Maximum load	Micrometer location	Stage size	Weight
6584-403	±6.5mm	0.04mm	0.01mm	0.01mm	29.4N (3kgf)	right	40x40mm	0.27kg
6584-603	±6.5mm	0.06mm	0.01mm	0.01mm	49N (5kgf)	right	60x60mm	0.48kg
6584-903	±12.5mm	0.06mm	0.01mm	0.02mm	93.1N (9.5kgf)	right	90x90mm	1kg
6584-1253	±12.5mm	0.08mm	0.01mm	0.02mm	180N (18.4kgf)	right	125x125mm	2.8kg

XZ-AXIS STAGE
CODE 6587-60

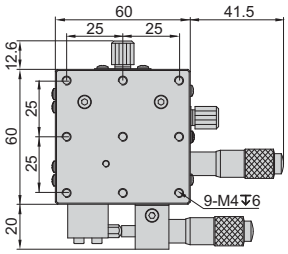

Unit: mm

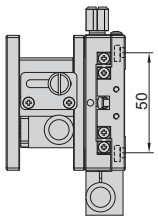

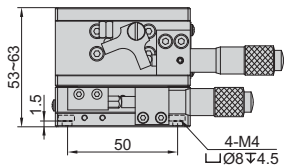

- Cross roller guides, achieve high precision and smooth movement
- Stage made of aluminum alloy

SPECIFICATION

Code	X-axis displacement	Z-axis displacement	Micrometer graduation	Maximum load	Stage size	Weight
6587-60	±6.5mm	10mm	0.01mm	29.4N (3kgf)	60x60mm	0.51kg

12

XYZ-AXIS STAGE
CODE 6585-60

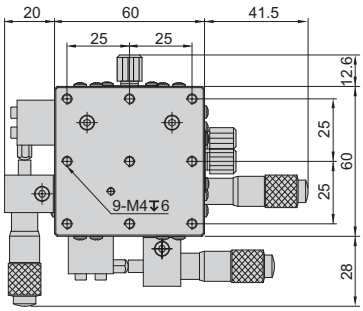

Unit: mm

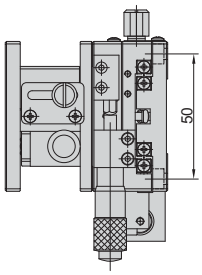

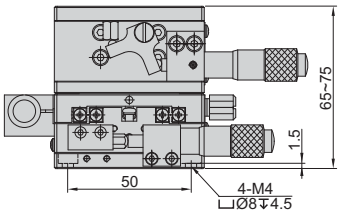

- Cross roller guides, achieve high precision and smooth movement
- Stage made of aluminum alloy

SPECIFICATION

Code	XY-axis displacement	Z-axis displacement	Micrometer graduation	Maximum load	Stage size	Weight
6585-60	±6.5mm	10mm	0.01mm	29.4N (3kgf)	60x60mm	0.75kg

ROTARY STAGES

6583-60H

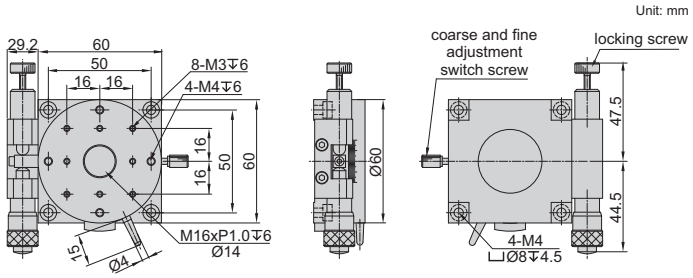

6583-90

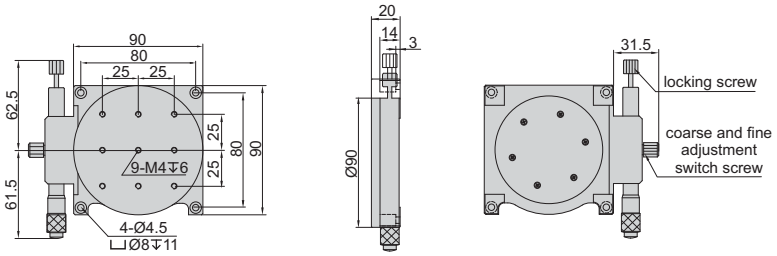

- Precise angle adjustment
- Coarse and fine adjustments
- Stages made of aluminum alloy

12

SPECIFICATION

Code	Range	Parallelism of top surface to bottom	Concentricity	Rotation accuracy	Maximum load	Stage size	Weight
6583-60H	360° coarse, ±5° fine	0.03mm	0.03mm	12′	29.4N (3kgf)	Ø60mm	0.30kg
6583-90	360° coarse, ±5° fine	0.04mm	0.03mm	5′	29.4N (3kgf)	Ø90mm	0.50kg

XY-AXIS ROTARY STAGE CODE 6588-60

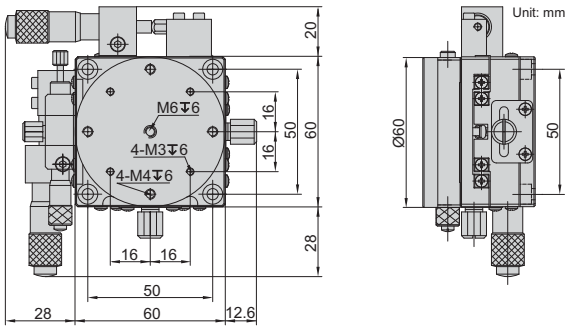

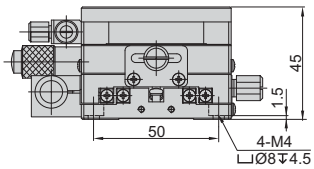

- Cross roller guides, achieve high precision and smooth movement
- Coarse and fine adjustments
- Precise angle adjustment
- Stage made of aluminum alloy

SPECIFICATION

Code	XY-axis displacement	Rotation range	Micrometer graduation	Rotation accuracy	Maximum load	Stage size	Weight
6588-60	±6.5mm	360° coarse, ±5° fine	0.01mm	10′	29.4N (3kgf)	60x60mm	0.64kg